Unit - 6

DC Transmission systems :-

An HVDC converter converts electric power from HVAC to HVDC or vice versa. HVDC is used as an alternative to AC for transmitting electrical energy over long distances or b/w AC power systems of different frequencies.

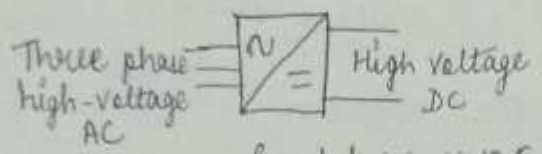

Symbol for HVDC converter

HVDC converters are bidirectional; they can convert either from AC to DC (rectification) or from DC to AC (inversion). A complete HVDC system always include at least one converter operating as a rectifier and at least one operating as an inverter.

Types of HVDC converters -

1) Line Commutated converters (LCC) - They are made of with electronic switches that can only be turned on. They are made of switching devices that are uncontrolled. They used mercury arc valves or thyristors. They are used mainly where very high capacity and efficiency are needed. The term line-commutated indicates that the conversion process relies on the line voltage of the AC system to which the converter is connected in order to effect the commutation from one switching device to its neighbour. There is lack of controllability of the DC voltage, is a disadvantage. In LCC, the DC current does not change direction, it flows through a large inductance and can be considered almost constant. On the AC side the converter behaves approx. as a current source, injecting both grid frequency and harmonic currents into the AC network. For this, a LCC is considered as a CSI.

2) Voltage Commutated converters (VCC) - They are made with switches that can turn on & off, so they are made of switching device IGBT, which ~~it~~ can be controlled. As a result, IGBTs can be used to make self-commutated converters.

In such converters, the polarity of DC voltage is usually fixed and the DC voltage, being smoothened by a large capacitance, can be considered constant. For this reason, an HVDC converter using IGBT is usually referred to as voltage-source converter.

VSC	LCC (CSC)
1.) In this, the DC-side voltage retains the same polarity and the direction of the converter power flow is determined by the polarity of DC-side current. The input voltage for VSC is kept constant and output voltage is independent of load.	In this, DC side current retains same polarity and the direction of the converter ~~over~~ power flow is determined by the polarity of DC-side voltage. The input current for CSC is kept constant and output current is independent of load.
2.) ~~In~~ For VSC, we use bridge converters and use pwm techniques.	For CSC we use diode, thyristor and switching devices.
3.) VSC are costly than CSC	CSC are cheaper.
4.) VSC has high short circuit current, as in VSC the fault current increases with addition of capacitors discharge current	CSC doesn't have high short circuit current, as for CSC, the rate of rise of fault current is limited by reactor

Types of DC link: For connecting two networks or system, various types of HVDC links are used. HVDC links are classified into three types. These links are explained below:

1) **Monopolar link:** It has a single conductor of negative polarity and uses earth or sea for the return path of current. Sometimes the metallic return is also used. In the Monopolar link, two converters are placed at the end of each pole. Earthling of poles is done by earth electrodes placed about 15 to 55 km away from the respective terminal stations. But this link has several disadvantages because it uses earth as a return path. The monopolar link is not much in use nowadays.

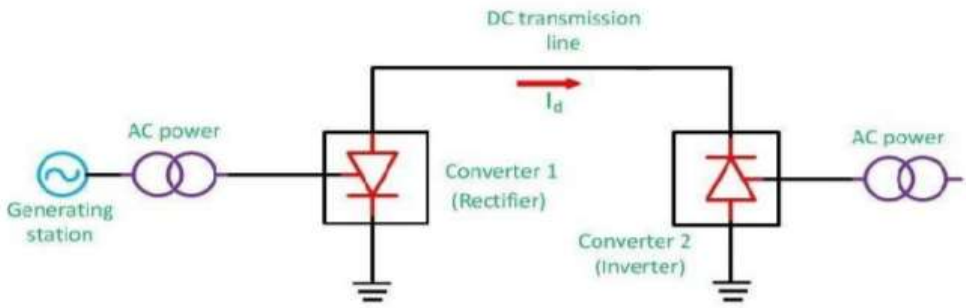

Fig 1: monopolar DC link

2) **Bipolar link**: The Bipolar link has two conductors one is positive, and the other one is negative to the earth. The link has converter station at each end. The midpoints of the converter stations are earthed through electrodes. The voltage of the earthed electrodes is just half the voltage of the conductor used for transmission the HVDC. 9 The most significant advantage of the bipolar link is that if any of their links stop operating, the link is converted into Monopolar mode because of the ground return system. The half of the system continues supplies the power. Such types of links are commonly used in the HVDC systems.

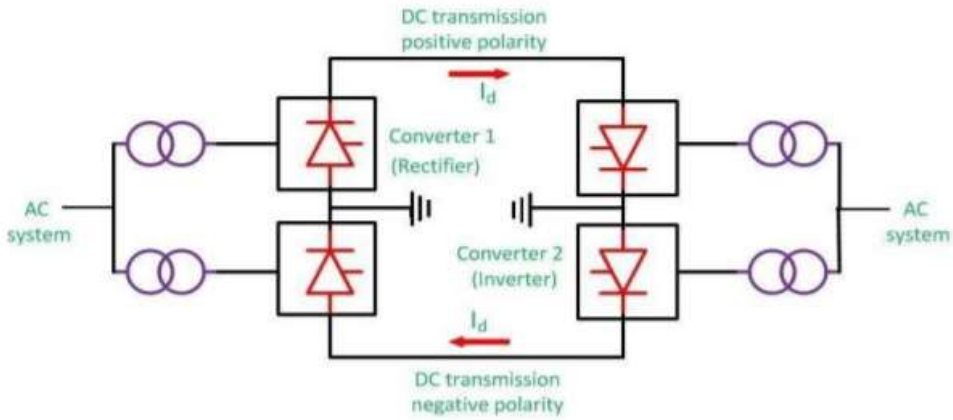

Fig 2: bipolar DC link

3) **Homopolar link:** It has two conductors of the same polarity usually negative polarity, and always operates with earth or metallic return. In the homopolar link, poles are operated in parallel, which reduces the insulation cost. The homopolar system is not used presently. 10

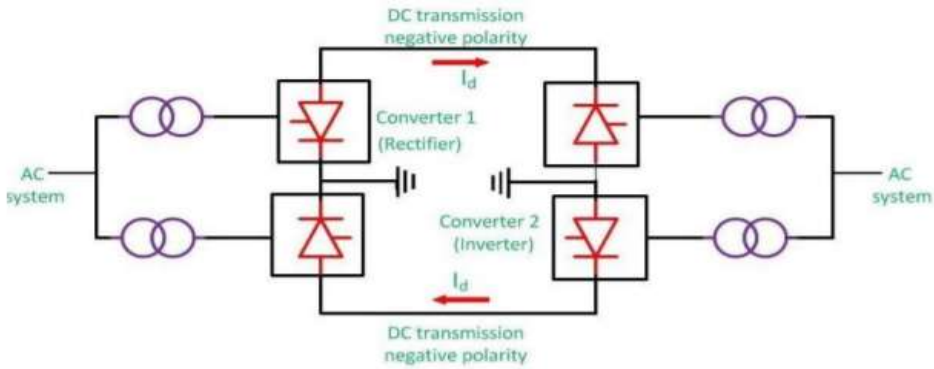

Fig 3: homopolar DC link

5.6 POWER FLOW IN *HVDC* TRANSMISSION SYSTEM

The equivalent circuit of a d.c. transmission system under steady state operating conditions is shown in Fig. 5.12.

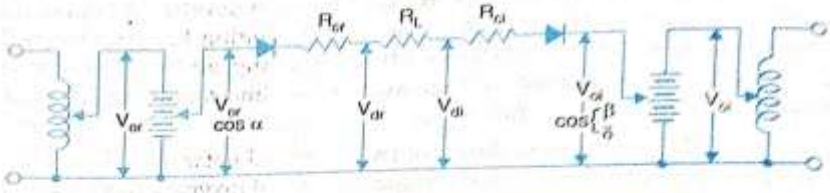

Fig. 5.12 Equivalent circuit of a d.c. transmission link.

The current I_d in the line is given by

$$I_d = \frac{V_{er} \cos \alpha - V_{ei} \cos (\beta \text{ or } \delta)}{R_{er} + R_L \pm R_{ei}} \qquad (5.14)$$

where R_L is the line resistance, R_{er} and R_{ei} are the fictitious rectifier and inverter resistances. If the inverter operates with constant ignition angle in the expression for I_d, cos β and + R_{ei} are used otherwise for constant extinction angle δ, cos δ and − R_{ei} are used. Here in our study we consider constant ignition angle β operation of inverter as ignition angle β can be controlled directly whereas δ is controlled indirectly through controlling β to values computed from the direct current I_d, the commutating voltage and the desired extinction angle. From the equation (5.14), it is clear that the current I_d is proportional to the difference of the two internal voltages (rectifier and inverter voltages) and is controlled by regulating these voltages as the resistances in the denominator of the expression for I_d are practically fixed for a given system.

Internal voltages can be controlled by any one or both of the following methods:

(*i*) Grid Control. (*ii*) Tap Change Control.

Small changes in voltages are adjusted using grid control as it is quite fast (about 5 ms) and large changes are brought about by tap changes which are inherently slow (about 5 sec. per step). Both these methods are used cooperatively at each terminal for voltage control and hence control of I_d and power flow.

From equation (5.14) it is clear that I_d and hence the difference of internal voltages are always positive as the thyristors can conduct only in one direction. Therefore, if it is desired to reverse the direction of power transmission, the polarity of the direct voltages at both ends of the line must be reversed while maintaining the sign of their algebraic difference. Inverter then acts as a rectifier and the rectifier as an inverter. It is to be noted that the terminal voltage of the rectifier is always greater in absolute value than that of the inverter, although it is lesser algebraically in the event of negative voltage.

★ Comparison b/w AC & DC transmission systems.

The two main factors to be considered while comparing the two kinds of systems are -

1.) Economic advantages
2.) Technical advantages

1.) Economic

1.) The HVDC transmission system requires only one conductor when compared to the AC transmission system which requires several conductors. So the cost of HVDC transmission system is less when compared to that of an AC transmission system.

2.) The ~~supported~~ supporting structure required for an HVDC transmission system is narrow, whereas an AC transmission system requires a lattice structure. So, the cost of the supporting tower is less when compared to that of an AC system.

3.) Line losses in HVDC transmission are less when compared to the AC transmission for the same power transfer ~~capability is needed~~ capacity. So, the energy cost in HVDC transmission lines is less when compared to that in AC transmission system.

4.) The HVDC lines can be built in two stages. The second stage can be built whenever the extra power transfer capability is needed. The first stage can be operated as a monopolar line with one conductor and ground as a return, whereas the second stage can be operated as a bipolar with two conductors without ground return. The investment on the second stage can, thus be postponed.

2.) Technical

1.) Reactive power requirement - When the load impedance equals the surge impedance of the line, the reactive power generated by the line capacitance equals the reactive power absorbed by the line inductance. The line cannot always be operated at its natural load since the

varies with time. In DC transmission, no reactive power is transmitted over the line. The reactive power is independent of line length but varies with the transmitted power.

2) System stability - In order to maintain stability, the length of an uncompensated AC line must be less than 500 km, whereas when series compensation is used, the length may be longer than 500 km. A DC transmission system has no such stability problems.

3) Short-circuit current - If two AC systems are ~~incorporate~~ interconnected by an AC line, then the short circuit current in the system increases. Therefore, the existing circuit breakers have to be replace with new (CB) of high ratings. In DC lines, the contribution of ~~S-C~~ S/C current is the same as the rated current carrying capacity of a DC line.

4) Independent control of AC system - The AC system which are ~~represented~~ interconnected by a DC line can be controlled independently.

5) Less corona loss and radio interference - The corona loss of a transmission system is proportional to $(f+25)$, the frequency of a DC system is zero. So, corona losses in a DC system are less when compared to an AC system of the same conductor diameter and voltage.

6.) Greater reliability - If a fault occurs in one conductor of a bipolar system, the other conductor continues to operate with ground return. So a two conductor bipolar DC line, is more reliable than a 3-ϕ conductor 3-ϕ AC circuits.

Solar Cell I-V Characteristic Curves show the current and voltage (I-V) characteristics of a particular photovoltaic (PV) cell, module or array giving a detailed description of its solar energy conversion ability and efficiency. Knowing the electrical I-V characteristics (more importantly P_{max}) of a solar cell, or panel is critical in determining the device's output performance and solar efficiency.

Photovoltaic solar cells convert the suns radiant light directly into electricity. With increasing demand for a clean energy source and the sun's potential as a free energy source, has made solar energy conversion as part of a mixture of renewable energy sources increasingly important. As a result, the demand for efficient solar cells, which convert sunlight directly into electricity, is growing faster than ever before.

Photovoltaic (PV) cells are made made almost entirely from silicon that has been processed into an extremely pure crystalline form that absorbs the photons from sunlight and then releases them as electrons, causing an electric current to flow when the photoconductive cell is connected to an external load. There are a variety of different measurements we can make to determine the solar cell's performance, such as its power output and its conversion efficiency.

The main electrical characteristics of a PV cell or module are summarized in the relationship between the current and voltage produced on a typical solar cell I-V characteristics curve. The intensity of the solar radiation (insolation) that hits the cell controls the current (I), while the increases in the temperature of the solar cell reduces its voltage (V).

Solar cells produce direct current (DC) electricity and current times voltage equals power, so we can create solar cell I-V curves representing the current versus the voltage for a photovoltaic device.

Solar Cell I-V Characteristics Curves are basically a graphical representation of the operation of a solar cell or module summarising the relationship between the current and voltage at the existing conditions of irradiance and temperature. I-V curves provide the information required to configure a solar system so that it can operate as close to its optimal peak power point (MPP) as possible.

Solar Cell I-V Characteristic Curve

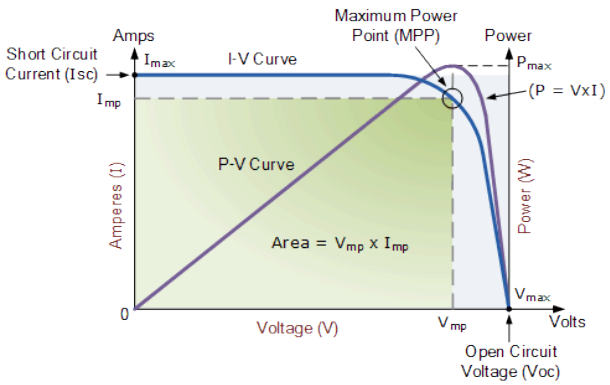

The above graph shows the current-voltage (I-V) characteristics of a typical silicon PV cell operating under normal conditions. The power delivered by a solar cell is the product of current and voltage (I x V). If the multiplication is done, point for point, for all voltages from short-circuit to open-circuit conditions, the power curve above is obtained for a given radiation level.

With the solar cell open-circuited, that is not connected to any load, the current will be at its minimum (zero) and the voltage across the cell is at its maximum, known as the solar cells **open**

circuit voltage, or Voc. At the other extreme, when the solar cell is short circuited, that is the positive and negative leads connected together, the voltage across the cell is at its minimum (zero) but the current flowing out of the cell reaches its maximum, known as the solar cells **short circuit current**, or Isc.

Then the span of the solar cell I-V characteristics curve ranges from the short circuit current (Isc) at zero output volts, to zero current at the full open circuit voltage (Voc). In other words, the maximum voltage available from a cell is at open circuit, and the maximum current at closed circuit. Of course, neither of these two conditions generates any electrical power, but there must be a point somewhere in between were the solar cell generates maximum power.

However, there is one particular combination of current and voltage for which the power reaches its maximum value, at Imp and Vmp. In other words, the point at which the cell generates maximum electrical power and this is shown at the top right area of the green rectangle. This is the "maximum power point" or **MPP**. Therefore the ideal operation of a photovoltaic cell (or panel) is defined to be at the maximum power point.

The maximum power point (MPP) of a solar cell is positioned near the bend in the I-V characteristics curve. The corresponding values of Vmp and Imp can be estimated from the open circuit voltage and the short circuit current: Vmp ≅ (0.8–0.90)Voc and Imp ≅ (0.85–0.95)Isc. Since solar cell output voltage and current both depend on temperature, the actual output power will vary with changes in ambient temperature.

Thus far we have looked at **Solar Cell I-V Characteristic Curve** for a single solar cell or panel. But many photovoltaic arrays are made up of smaller PV panels connected together. Then the I-V curve of a PV array is just a scaled up version of the single solar cell I-V characteristic curve as shown.

1. Solar Panel I-V Characteristic Curves

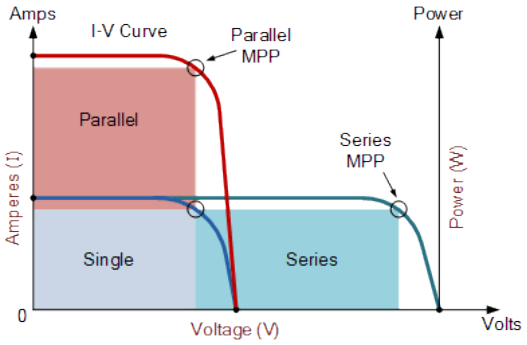

Photovoltaic panels can be wired or connected together in either series or parallel combinations, or both to increase the voltage or current capacity of the solar array. If the array panels are connected together in a series combination, then the voltage increases and if connected together in parallel then the current increases. The electrical power in Watts, generated by these different photovoltaic combinations will still be the product of the voltage times the current, (P = V x I). However the solar panels are connected together, the upper right hand corner will always be the maximum power point (MPP) of the array.

2. *The Electrical Characteristics of a Photovoltaic Array*

The electrical characteristics of a photovoltaic array are summarised in the relationship between the output current and voltage. The amount and intensity of solar insolation (solar irradiance) controls the amount of output current (I), and the operating temperature of the solar cells affects the output voltage (V) of the PV array. Solar cell I-V characteristic curves

that summarise the relationship between the current and voltage are generally provided by the panels manufacturer and are given as:

1. Solar Array Parameters

- • V_{OC} = open-circuit voltage: – This is the maximum voltage that the array provides when the terminals are not connected to any load (an open circuit condition). This value is much higher than Vmp which relates to the operation of the PV array which is fixed by the load. This value depends upon the number of PV panels connected together in series.
- • I_{SC} = short-circuit current – The maximum current provided by the PV array when the output connectors are shorted together (a short circuit condition). This value is much higher than Imp which relates to the normal operating circuit current.
  - • MPP = maximum power point – This relates to the point where the power supplied by the array that is connected to the load (batteries, inverters) is at its maximum value, where MPP = Imp x Vmp. The maximum power point of a photovoltaic array is measured in Watts (W) or peak Watts (Wp).
  - • FF = fill factor – The fill factor is the relationship between the maximum power that the array can actually provide under normal operating conditions and the product of the open-circuit voltage times the short-circuit current, (Voc x Isc) This fill factor value gives an idea of the quality of the array and the closer the fill factor is to 1 (unity), the more power the array can provide. Typical values are between 0.7 and 0.8.
  - • %eff = percent efficiency – The efficiency of a photovoltaic array is the ratio between the maximum electrical power that the array can produce compared to the amount of solar irradiance hitting the array. The efficiency of a typical solar array is normally low at around 10-12%, depending on the type of cells (monocrystalline, polycrystalline, amorphous or thin film) being used.

Solar Cell I-V Characteristic Curves are graphs of output voltage versus current for different levels of insolation and temperature and can tell you a lot about a PV cell or panel's ability to convert sunlight into electricity. The most important values for calculating a particular panels power rating are the voltage and current at maximum power.

Some solar panels are rated at slightly higher or lower voltages than others of the same wattage value, and this affects the amount of current available and therefore the panels MPP. Other parameters also important are the open circuit voltage and short circuit current ratings from a safety point of view, especially the voltage rating. An array of six panels in series, while having a nominal 72 volt (6 x 12) rating, could potentially produce an open-circuit voltage of over 120 volts DC, which is more than enough to be dangerous.

Photovoltaic I-V characteristics curves provide the information needed for us to configure a solar power array so that it can operate as close as possible to its maximum peak power point. The peak power point is measured as the PV module produces its maximum amount of power when exposed to solar radiation equivalent to 1000 watts per square metre, 1000 W/m^2 or $1kW/m^2$.

For more information about **Solar Cell I-V Characteristic Curves** and how they are used to determine the maximum power point of a photovoltaic cell or panel, or to explore the advantages and disadvantages of using solar panels as an alternative energy source, then Click Here and order your copy from Amazon today and learn more about the fun and easy way to get a grip on photovoltaic design and installation.

Solar Cell I-V Characteristic Curves

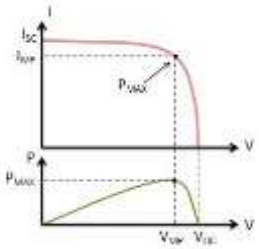

Fig.1. Current, Voltage and Power Curves

A Current (I) versus Voltage (V) Curve of a PV / Solar Module (â€œI-Vâ€ • Curve) shows the possible combinations of its current and voltage outputs. A typical I-V curve for a 12 V Module is shown at Fig. 1 above.

The power in a DC electrical circuit is the product of the voltage and the current. Mathematically,

Power (P) in Watts (W) = The Current (I) in Amperes (A) X the Voltage (V) in Volts (V) i.e. W = V X A

A Solar (PV) Cell or a Panel / Module produces its maximum current when there is no resistance in the circuit, i.e. when there is a short circuit between its Positive and Negative terminals. This maximum current is known as the Short Circuit Current and is abbreviated as Isc. When the Cell / Panel (Module) is shorted, the voltage in the circuit is zero.

Conversely, the maximum voltage occurs when there is a break in the circuit. This is called the Open Circuit Voltage (Voc). Under this condition, the resistance is infinitely high and there is no current, since the circuit is incomplete. **Typical value of the open-circuit voltage is located about 0.5 â€“ 0.6 V for Crystalline Cells and 0.6 â€“ 0.9 V for Amorphous Cells.** These two extremes in load resistance, and the whole range of conditions in between them, are depicted on the I-V Curve. Current, expressed in Amps, is on the vertical Y-axis. Voltage, in Volts, is on the horizontal X-axis.

The power available from a photovoltaic device at any point along the curve is just the product of Current (I) in Amps (A) and Voltage (V) in Volts (V) at that point and is expressed in Watts. At the short circuit current point, the power output is zero, since the voltage is zero. At the open circuit voltage point, the power output is also zero, but this time it is because the current is zero.

There is a point on the knee of the I-V Curve where the maximum power output is located and this point is called the Maximum Power Point (MPP). The voltage and current at this Maximum Power Point are designated as Vmp and Imp.

The values of Vmp and Imp can be estimated from Voc and Isc as follows: Vmp = (0.75 â€“ 0.9) Voc Imp = (0.85 â€“ 0.95) Isc

The rated power of the PV / Solar Module in Watts (Pmax) is derived from the above values of voltage Vmp and current Imp at this Maximum Power Point (MPP):

Rated power in Watts, Pmax = Vmp x Imp

1. *Example of I-V Curve and Ratings of a 12 V Solar (PV) Panel*

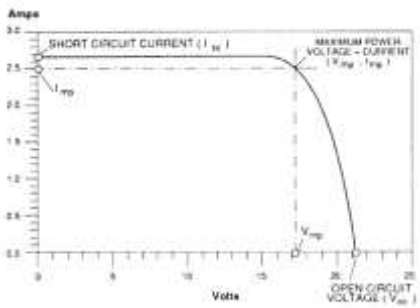

Fig.2. Example of I-V Curve and Ratings of a 12 V PV / Solar Panel

The I-V Curve for a typical 12 Volt PV / Solar Panel is shown at Fig.2 above

This Maximum Power Point in the example curve given above is where Vmp is 17 Volts, and the current Imp is 2.5 amps. Therefore, the rated or the maximum power Wmax in watts is 17 Volts times 2.5 Amps, or 42.5 Watts.

The I-V curve is also used to compare the performance of PV / Solar Modules. The curve is, therefore generated based on the performance under Standard Test Conditions (STC) of sunlight and device temperature of 25 Â°C. It assumes there is no shading on the device. Standard sunlight conditions on a clear day are assumed to be 1,000 Watts of solar energy per square meter (1000 W/m2 or 1 kW/m2). This is sometimes called one sun, or a peak sun. Less than one sun will reduce the current output of the PV device by a proportional amount. For example, if only one-half sun (500 W/m2) is available, the amount of output current is roughly cut in half.

Power Electronic Interfaces for PV Systems

Power electronic interfaces are used either to convert the dc energy to ac energy to supply ac loads or connection to the grid or to control the terminal conditions of the PV module to track the MPP for maximizing the extracted energy. They also provide wide operating range, capability of operation over different daily and seasonal conditions, and reaching the highest possible efficiency [117]. There are various ways to categorize power electronic interfaces for solar systems. In this book, power electronic interfaces are categorized as power electronic interfaces for grid-connected PV systems and stand-alone PV systems.

Power electronic interfaces for grid connected PV systems

The power electronic interfaces for grid-connected PV systems can be classified into two main criteria: classification based on inverter utilization and classification based on converter stage and module configurations.

Topologies based on inverter utilization

The centralized inverter system is illustrated in Fig. 23.13.

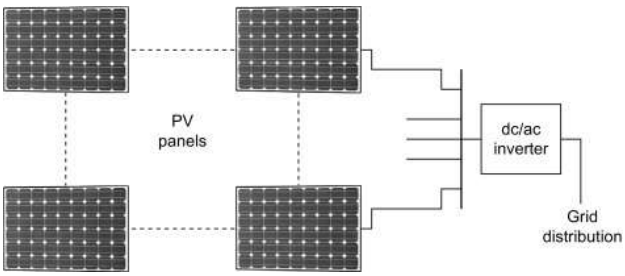

Sign in to download full-size image

Fig. 23.13. Conventional PV system technology using centralized inverter system topology.

In this topology, PV modules are connected in series and parallel to achieve the required current and voltage levels. Only one inverter is used in this topology at the common dc bus. In this topology, the inverter's power losses are higher than string inverter or multi-inverter topologies due to the mismatch between the modules and necessity of string diodes that are connected in series. In this topology, voltage boost may not be required since the voltage of series-connected string voltages is high enough [118].

In string inverter topology, the single string of modules is connected to the separate inverters for each string [119]. In this topology, voltage boosting may not be required if enough number of components are connected in series in each string.

In the multistring inverter topology, several strings are interfaced with their own integrated dc/dc converter to a common dc/ac inverter [120,121] as shown in Fig. 23.14.

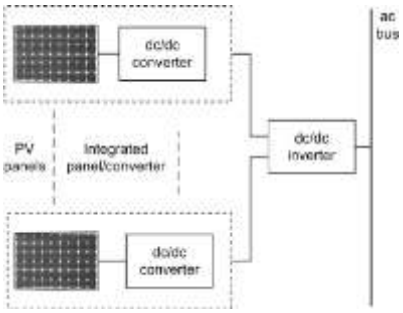

Fig. 23.14. Multistring inverters topology.

Therefore, this is a flexible design with high efficiency. In this topology, each PV module has its integrated power electronic interface with utility. The power loss of the system is relatively lower due to the reduced mismatch among the modules, but the constant losses in the inverter may be the same as for the string inverter. In addition, this configuration supports optimal operation of each module, which leads to an overall optimal performance [118]. This is due to the fact that each PV panel has its individual dc/dc converter and maximum power levels can be achieved separately for each panel.

Topologies based on module and stage configurations

The power electronic conditioning circuits for solar energy systems can be transformerless, or they can utilize high-frequency transformers embedded in a dc/dc converter, which avoids

bulky low-frequency transformers. The number of stages in the presented topologies refers to the number of cascaded converters/inverters in the system.

Isolated dc/dc converters consist of a transformer between the dc/ac and ac/dc conversion stages [122]. This transformer provides isolation between the PV source and load. A typical topology is depicted in Fig. 23.15.

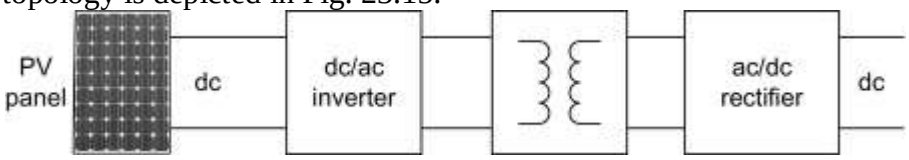

Sign in to download full-size image

Fig. 23.15. Isolated dc/dc converter topology.

In the topology shown in Fig. 23.15, the outputs of the PV panel and dc/dc converter are dc voltages. The two-stage dc/dc converter consists of a dc/ac inverter, a high-frequency transformer, and a rectifier. In this topology, a capacitor can be used between the bottom leg of the high-frequency inverter and the transformer, forming an LC resonant circuit with the equivalent inductance of the transformer. This resonance circuit reduces the switching losses of the inverter. Alternatively, only two switches are enough if a push-pull converter is used; however, this topology requires a middle terminal outputted transformer [118].

The topologies shown in Fig. 23.16A and B are two-stage single-module topologies, in which a dc/dc converter is connected to a dc/ac converter for grid connection. The dc/dc converter deals with the MPP tracking, and the dc/ac inverter is employed to convert the dc output to ac voltage for grid connection. These are nonisolated converters since they are transformerless.

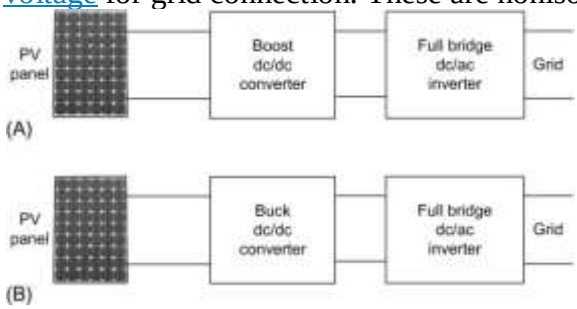

Sign in to download full-size image

Fig. 23.16. (A) Boost converter with full-bridge inverter; (B) buck converter with full-bridge inverter.

Instead of using a full-bridge inverter for the dc/ac conversion stage, a half-bridge inverter can also be used. In this way, number of switching elements can be reduced, and the controller can be simplified; however, for the dc bus, two-series-connected capacitor is required to obtain the midpoint. This midpoint of two-series-connected capacitors will be used as the negative terminal of the ac network of the half-bridge configuration.

The single-stage inverter for multiple modules is depicted in Fig. 23.17, which is the simplest grid-connection topology [123]. The inverter is a standard voltage-source PWM inverter, connected to the utility through an LCL filter. The input voltage, generated by the PV modules, should be higher than the peak voltage of the utility. The efficiency is about 97%. On the other

hand, all the modules are connected to the same MPPT device. This may cause severe power losses during partial shadowing. In addition, a large capacitor is required for power decoupling between PV modules and utility [124].

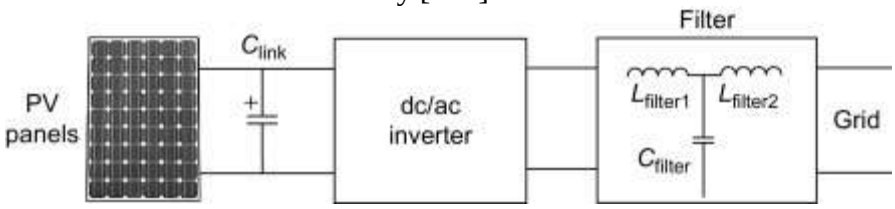

Sign in to download full-size image

Fig. 23.17. Single-stage inverter for multiple modules.

A topology for multimodule multistring interfaces is shown in Fig. 23.18 [121,125]. The inverter in Fig. 23.18 consists of up to three boost converters, one for each PV string, and a common half-bridge PWM inverter. The circuit can also be constructed with an isolated current- or voltage-fed push-pull or full-bridge converter [126] and a full-bridge inverter toward the utility. The voltage across each string can be controlled individually [121,126].

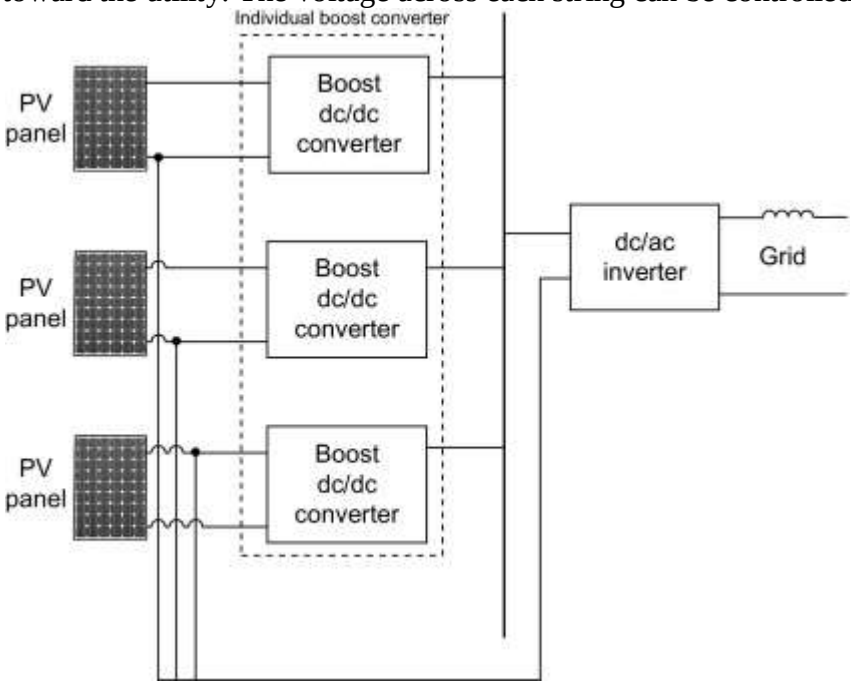

Sign in to download full-size image

Fig. 23.18. Topology of the power electronics of the multistring inverter.

As an alternative to the topology shown in Fig. 23.18, other types of dc/dc converter can be employed to the first stage, such as isolated dc/dc converters.

Power electronic interfaces for stand-alone PV systems

The stand-alone PV systems are composed of a storage device and its controller for sustainable satisfaction of the load power demands [127]. The storage device with the controller should provide the power difference when the available power from the PV panel is smaller than the required power at the load bus [128]. When the available power from the PV panel is more than the required power, the PV panel should supply the load power, and the excess power

should be used to charge the storage device. A simple PV panel/battery connection topology is shown in Fig. 23.19.

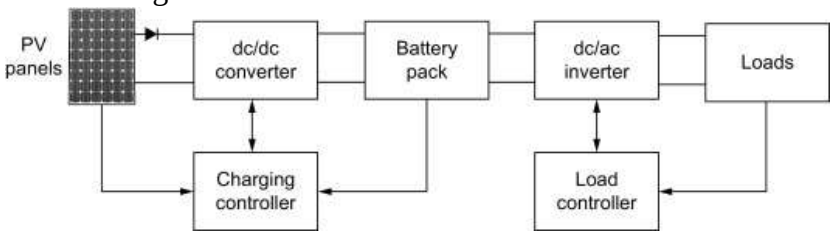

Fig. 23.19. PV/battery connection for stand-alone applications.

In this simple topology, the dc/dc converter between the battery and the PV panel is used to capture all the available power from the PV panel. In this system, battery pack acts as an energy buffer, charged from the PV panel and discharged through the dc/ac inverter to the load side. The charging controller determines the charging current of the battery, depending on the MPP of the PV panels at a certain time. When there is no solar insulation available, the dc/dc converter disables, and the stored energy within the battery supplies the load demands. The battery size should be selected so that it can supply all the power demands during a possible no-insulation period. In addition, it could be fully charged during the insulated periods to store the energy for future use. Since the combined model produces ac electric energy, it should be converted to ac electric energy for domestic electric loads. The combined system requires a dc/ac inverter, which is also used to match the different dynamics of the combined energy system and various loads. The proper response of the PV/battery system to the overall load dynamics can be achieved by generating appropriate switching signals to the inverter while modulating for both active and reactive powers. The load bus voltage can be controlled by the modulation index control of the inverter; while the load control can be achieved by the phase angle control of the inverter.

2. . Wind turbine power ouput variation with steady wind speed.

The figure below shows a sketch a how the power output from a wind turbine varies with steady wind speed.

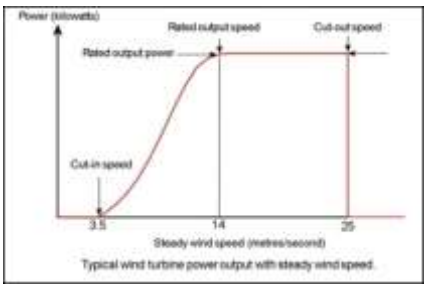

Cut-in speed.

At very low wind speeds, there is insufficient torque exerted by the wind on the turbine blades to make them rotate. However, as the speed increases, the wind turbine will begin to rotate and generate electrical power. The speed at which the turbine first starts to rotate and generate power is called the **cut-in speed** and is typically between 3 and 4 metres per second.

Rated output power and rate output wind speed.
As the wind speed rises above the cut-in speed, the level of electrical ouput power rises rapidly as shown. However, typically somewhere between 12 and 17 metres per second, the power output reaches the limit that the electrical generator is capable of. This limit to the generator output is called the **rated power output** and the wind speed at which it is reached is called the **rated output wind speed.** At higher wind speeds, the design of the turbine is arranged to limit the power to this maximum level and there is no further rise in the output power. How this is done varies from design to design but typically with large turbines, it is done by adjusting the blade angles so as to to keep the power at the constant level.

Cut-out speed.
As the speed increases above the rate output wind speed, the forces on the turbine structure continue to rise and, at some point, there is a risk of damage to the rotor. As a result, a braking system is employed to bring the rotor to a standstill. This is called the ***cut-out speed*** and is usually around 25 metres per second.

Wind turbine efficiency or power coefficient.
The available power in a stream of wind of the same cross-sectional area as the wind turbine can easily be shown to be

$$\frac{1}{2}\rho U^3 \frac{\pi d^2}{4}$$

If the wind speed U is in metres per second, the density ρ is in kilograms per cubic metre and the rotor diameter d is in metres then the available power is in watts. The efficiency, μ, or, as it is more commonly called, the power coefficient, cp, of the wind turbine is simply defined as the actual power delivered divided by the available power.

$$\mu = \frac{Power}{\frac{1}{2}\rho U^3 \frac{\pi d^2}{4}}$$

The Betz limit on wind turbine efficiency.
There is a theoretical limit on the amount of power that can be extracted by a wind turbine from an airstream. It is called the Betz limit and the proof of this limit is given on web Page 16 for those interested in such things. The limit is
μ=16/27≈ 59%

Fixed and variable speed turbines:-

A **variable speed** wind turbine is one which is specifically designed to operate over a wide range of rotor speeds. It is in direct contrast to fixed speed wind turbine where the rotor speed is approximately constant. The reason to vary the rotor speed is to capture the maximum aerodynamic power in the wind, as the wind speed varies. The aerodynamic efficiency, or

coefficient of power, for a fixed blade pitch angle is obtained by operating the wind turbine at the optimal tip-speed ratio as shown in the following graph.

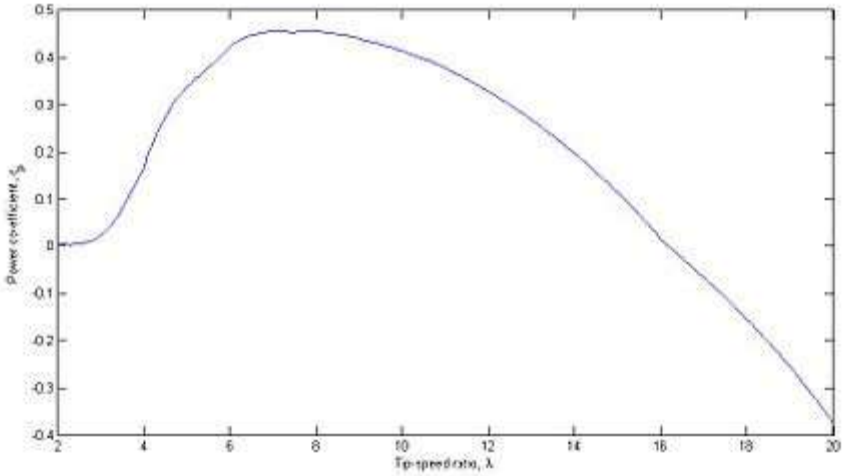

Tip-speed ratio is given by the following expression,

where is the rotor speed (in radians per second), is the radius of the rotor, and is the wind speed. As the wind speed varies, the rotor speed must be varied to maintain peak efficiency.

(A fixed-speed wind turbine always spins at the same generator/rotor speed during operation, regardless of the wind speed. Thus, the tip-speed ratio (TSR) would change with wind speed and the rotor aerodynamic performance would only be optimal at a given wind speed. The generator torque of a fixed-speed wind is dictated solely by the induction generator (only small speed deviations are expected as a result of the slip of the induction generator)).

A variable-speed wind turbine allows the generator/rotor speed to vary proportional to wind speed between cut-in and rated speed, thus maintaining a constant TSR and optimal aerodynamic performance. Above rated speed, the generator/rotor speed is then held constant. The torque must be actively controlled.

3. Synchronous Generator

1. Synchronous Generator as a Wind Power Generator

Like the DC generator in the previous tutorial, the operation of a **Synchronous Generator** is also based on Faraday's law of electromagnetic induction, working in a similar fashion to an automotive type alternator. The difference this time is that the synchronous generator generates a three-phase AC voltage output from its stator windings, unlike the DC generator which produces a single DC or direct current output. Single-phase synchronous generators are also available for low power domestic wind turbine synchronous generator systems.

Basically, the *synchronous generator* is a synchronous electro-mechanical machine used as a generator and consists of a magnetic field on the rotor that rotates and a stationary stator containing multiple windings that supplies the generated power. The rotors magnetic field system (excitation) is created by using either permanent magnets mounted directly onto the rotor or energised electro-magnetically by an external DC current flowing in the rotor field windings.

This DC field current is transmitted to the synchronous machine's rotor via slip rings and carbon or graphite brushes. Unlike the previous DC generator design, synchronous generators do not require complex commutation allowing for a simpler construction. Then the synchronous generator operates in a similar way to the automotive car alternator and consists of the two following common parts:

1. Main Components of a Synchronous Generator

- The Stator: – The stator carries the three separate (3-phase) armature windings physically and electrically displaced from each other by 120 degrees producing an AC voltage output.
- The Rotor: – The rotor carries the magnetic field either as permanent magnets or wound field coils connected to an external DC power source via slip rings and carbon brushes.

When talking about the "synchronous generator", the terminology used for the description of the machines parts is the reverse to that for the description of the DC generator. The field windings are the windings producing the main magnetic field which are the rotor windings for a synchronous machine, and the armature windings are the windings where the main voltage is induced usually called the stator windings. In other words, for a synchronous machine, the rotor windings are the field windings and the stator windings are the armature windings as shown.

2. Synchronous Generator Construction

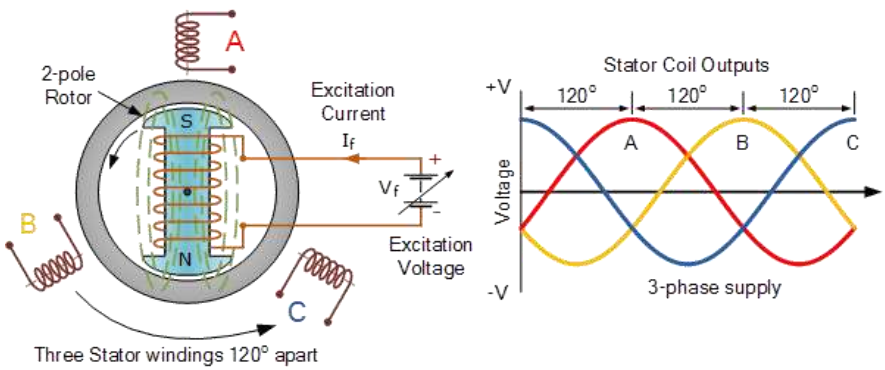

The example above shows the basic construction of a synchronous generator which has a wound salient two-pole rotor. This rotor winding is connected to a DC supply voltage producing a field current, I_f. The external DC excitation voltage which can be as high as 250 volts DC, produces an electromagnetic field around the coil with static North and South poles. When the generators rotor shaft is turned by the turbines blades (the prime mover), the rotor poles will also move producing a rotating magnetic field as the North and South poles rotate at the same angular velocity as the turbine blades, (assuming direct drive). As the rotor rotates, its magnetic flux cuts the individual stator coils one by one and by Faraday's law, an emf and therefore a current is induced in each stator coil.

The magnitude of the voltage induced in the stator winding is, as shown above, a function of the magnetic field intensity which is determined by the field current, the rotating speed of the rotor, and the number of turns in the stator winding. As the synchronous machine has three stator coils, a 3-phase voltage supply corresponding to the windings, A, B and C which are electrically 120° apart is generated in the stator windings and this is shown above.

This 3-phase stator winding is connected directly to the load, and as these coils are stationary they do not need to go through large unreliable slip-rings, commutator or carbon brushes. Also because the main current generating coils are stationary, it makes it easier to wind and insulate the windings because they are not subjected to rotational and centrifugal forces allowing for greater voltages to be generated.

2. *Permanent Magnet Synchronous Generator*

As we have seen, wound-field synchronous machines require DC current excitation in the rotor winding. This excitation is done through the use of brushes and slip rings on the generator shaft. However, there are several disadvantages such as requiring regular maintenance, cleaning of the carbon dust, etc. An alternative approach is to use brushless excitation which uses permanent magnets instead of electromagnets.

As its name implies, in a **permanent magnet synchronous generator** (PMSG), the excitation field is created using permanent magnets in the rotor. The permanent magnets can be mounted on the surface of the rotor, embedded into the surface or installed inside the rotor. The air gap between the stator and rotor is reduced for maximum efficiency and to minimise the amount of rare earth magnet material needed. Permanent magnets are typically used in low power, low cost synchronous generators.

For low speed direct drive wind turbine generators the permanent magnet generator is more competitive because it can have higher pole number of 60 or more poles compared to a conventional wound rotor synchronous generator. Also, the excitation implementation with permanent magnets is simpler, more durable but does not allow control of excitation or reactive power. The one major disadvantage of permanent magnet wind turbine synchronous generators is that with no control of the rotor flux, they attain their peak efficiency only at one pre-defined wind speed.

3. *The Generators Synchronous Speed*

The frequency of the output voltage depends upon the speed of rotation of the rotor, in other words its "angular velocity", as well as the number of individual magnetic poles on the rotor. In our simple example above, the synchronous machine has two-poles, one North pole and one South pole. In other words, the machine has two individual poles or *one pair of poles*, (North-South) also known as pole pairs.

As the rotor rotates one complete revolution, 360º, one cycle of induced emf is generated, so the frequency will be one-cycle every full rotation or 360º. If we double the number of magnetic poles to four, (two pairs of poles), then for every revolution of the rotor, two cycles of induced emf will be generated and so on.

Since one cycle of induced emf is produced with a single pair of poles, the number of cycles of emf produced in one revolution of the rotor will therefore be equal to the number of pole pairs, P. So if the number of cycles per revolution is given as: P/2 relative to the number of poles and the number of rotor revolutions N per second is given as: N/60, then the frequency, (f) of the induced emf will be defined as:

$$\text{Frequency}, (f) = \frac{P}{2} \times \frac{N}{60} = \frac{PN}{120} \text{ Hz}$$

In a synchronous motor, its angular velocity is fixed by the frequency of the supply voltage so N is commonly known as the synchronous speed. Then for a "P"-pole synchronous generator the speed of rotation of the prime mover (the turbine blades) in order to produce the required frequency output of either 50Hz or 60Hz of the induced emf will be:

Number of Individual Poles	2	4	8	12	24	36	48

Rotational Speed (rpm)	3,000	1,500	750	500	250	167	125

At 50Hz

At 60Hz

Number of Individual Poles	2	4	8	12	24	36	48
Rotational Speed (rpm)	3,600	1,800	900	600	300	200	150

So for a given synchronous generator designed with a fixed number of poles, the generator must be driven at a fixed synchronous speed to keep the frequency of the induced emf constant at the required value, either 50Hz or 60Hz to power mains appliances. In other words, the frequency of the emf produced is synchronised with the mechanical rotation of the rotor.

Then from above, we can see that to generate 60 Hz using a 2-pole machine, the rotor must rotate at 3600 revs/min, or to generate 50 Hz using a 4-pole machine, rotor must rotate at 1500 revs/min. For a synchronous generator that is being driven by an electrical motor or steam generator, this synchronous speed may be easy to achieve however, when used as a wind turbine synchronous generator, this may not be possible as the velocity and power of the wind is constantly changing.

We know from our previous wind turbine design tutorial, that all wind turbines benefit from the rotor operating at its optimal *tip speed ratio*. But to obtain a TSR of between 6 to 8, the angular velocity of the blades is generally very low around 100 to 500 rpm, so looking at our tables above, we would require a synchronous generator with a high number of magnetic poles, eg, 12 or above, as well as some form of mechanical speed limiter such as a Continuously Variable Transmission, or CVT to keep the rotor blades rotating at a constant maximum speed for a direct drive wind turbine system. However, for a synchronous machine, the more poles it has the larger, heavier and more expensive becomes the machine which may or may not be acceptable.

One solution is to use a synchronous machine with a low number of poles which can rotate at a higher speed of 1500 to 3600 rpm driven through a gearbox. The low rotational speed of the wind turbines rotor blades is increased through a gearbox which allows the generator speed to remain more constant when the turbines blade speed changes as a 10% change at 1500rpm is less of a problem than a 10% change at 100rpm. This gearbox can match the generators speed to variable rotational speeds of the blades allowing for variable speed operation over a wider range.

However, the use of a gearbox or pulley system requires regular maintenance, increases the weight of the wind turbine, generates noise, increases power losses and reduces system efficiency as extra energy is required to drive the gearboxes cogs and internal components.

There are many advantages to using a direct drive system without a mechanical gearbox, but the omission of a gearbox means a larger synchronous machine with an increase in both size and cost of the generator, which then has to operate at a low speeds. So how can we operate a synchronous generator in a low speed wind turbine system whose rotor blade speed is

determined only by the winds power. By rectifying the generated 3-phase supply into a constant DC or direct current supply.

4. Synchronous Generator Rectifiers

Rectifiers are electronic devices used to convert AC (alternating current) into DC (direct current). By rectifying the power output from the synchronous generator into a DC supply, the wind turbine generator may be operated at different speeds and frequencies other than its fixed synchronous speed converting this variable frequency/variable amplitude AC output voltage of the generator to a DC voltage of a variable level. By rectifying the output from AC into DC, the generator can now be used as part of a battery-charging wind systems or as part of a variable-speed wind power system. Then the synchronous generator of an alternating current is transformed into a generator of a direct current.

The simplest type of rectifier circuit uses a diode bridge circuit to convert the AC generated by the generator into a fluctuating DC supply whose amplitude is determined by the generators speed of rotation. In this synchronous generator rectifier circuit shown below, the generator's 3-phase output is rectified to DC by a 3-phase rectifier.

1. Synchronous Generator Rectifier Circuit

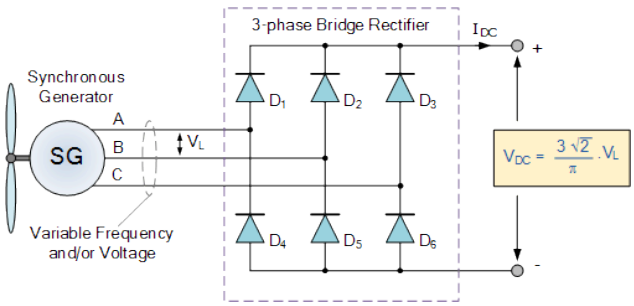

The circuit diagram of the full-bridge, three-phase, AC to DC rectifier is shown above. In this configuration, the wind turbine can operate the generator at a frequency independent of the synchronous frequency as changing the generator speed varies the generator frequency. Hence it is possible to vary the speed of the generator over a wider range and to run at the optimal speed to obtain the maximum power depending on the actual wind speed.

Note that the output voltage from the 3-phase bridge rectifier is not pure DC. The output voltage has a DC level together with a large AC variation. This waveform is generally known as "pulsating DC" which can be used to charge batteries but can not be used as a satisfactory DC supply. In order to remove this AC ripple content a filter or smoothing circuit is used. These smoothing circuits or ripple filter circuits use combinations of Inductors and Capacitors to produce a smooth DC voltage and current.

When used as part of a grid-connected system, synchronous machines can only be connected to the mains grid, when their frequency, phase angle, and output voltage are the same as the grids, in other words they are rotating at their synchronous speed as we have seen above. But by rectifying their variable output voltage and frequency into a steady DC supply, we can now convert this DC voltage into an AC supply of the correct frequency and amplitude, matching that of the mains utility grid by using either a single-phase or 3-phase inverter.

An *Inverter* is a device that converts direct current (DC) electricity to alternating current (AC) electricity which can be fed directly into the mains grid as grid-connected inverters operate in sync with the utility grid and produce electricity that's identical to utility grid power. Grid-connected sine-wave inverters for wind systems are selected with an input range that corresponds to the rectified output voltage of the turbine.

Then the advantage of an indirect grid connection is that it is possible to run the wind turbine at variable speeds. Another advantage of rectifying the output from the generator is that wind turbines with synchronous generators which use electromagnets in their rotor design, can use this DC to supply the coil windings around the electromagnets in the rotor. However the disadvantage of indirect grid connection is the cost as the system needs an inverter and two rectifiers, one to control the stator current, and another to generate the output current as shown below.

2. Synchronous Generator Circuit

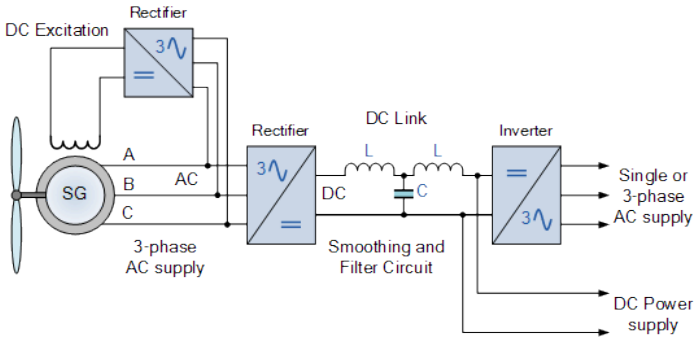

5. *Synchronous Generator Summary*

The **wound rotor synchronous generator** is already being used as a wind power turbine generator, but one of the major disadvantage of a synchronous generator can be its complexity and cost. Gearless direct drive generators are very slow turning synchronous generators with large numbers of poles in order to reach their synchronous speed. Generators with fewer poles have higher rotational speeds so require a gearbox or drive train adding to the cost.

Grid-tied generators require a constant fixed speed to synchronise with the utility grid frequency and it is necessary to excite the rotor winding with an external DC supply, using slip rings and brushes. The major disadvantage of one fixed-speed operation is that it almost never captures the wind energy at the peak efficiency. The wind energy is wasted when the wind speed is higher or lower than the certain value selected as the synchronous speed.

Variable speed wind turbines use rectifiers and inverters to convert variable voltage, variable frequency output of the synchronous generator into the fixed voltage, fixed 50Hz or 60Hz frequency output required by the utility grid. This allows for permanent magnet synchronous generators to be used reducing the cost. For low speed direct drive wind turbine generators the permanent magnet generator is more competitive because it can have higher pole number of 60 or more poles compared to a conventional wound rotor synchronous generator.

In the next tutorial about Wind Energy and **Wind Turbine Generators**, we will look at the operation and design of another type of electrical machine called the Induction Generator also known commonly as an "Asynchronous Generator" which can also be used for generating three-phase grid connected AC electricity.

To learn more about "Synchronous Generators", or obtain more wind energy information about the various wind turbine generating systems available, or to explore the advantages and disadvantages of using synchronous generators as part of a grid connected wind turbine system, Click Here to get your copy of one of the top Synchronous Generator and Motor books today direct from Amazon.

4. Induction Generator

1. Induction Generator as a Wind Power Generator

Rotating electrical machines are commonly used in wind energy systems and most of these electrical machines can function as either a motor or a generator, depending upon its particular application. But as well as the *Synchronous Generator* we looked at in the previous tutorial, there is also another more popular type of 3-phase rotational machine that we can use as a wind turbine generator called an **Induction Generator**.

Both the synchronous generator and the *Induction Generator* have similar fixed stator winding arrangement which, when energised by a rotating magnetic field, produces a three-phase (or single phase) voltage output.

However, the rotors of the two machines are quite different with the rotor of an induction generator typically consisting of one of two types of arrangement: a "squirrel cage", or a "wound rotor".

Single Phase Induction Generator

Induction Generator construction is based on the very common squirrel-cage induction motor type machine as they are cheap, reliable, and readily available in a wide range of electrical sizes from fractional horse power machines to multi-megawatt capacities making them ideal for use in both domestic and commercial renewable energy wind power applications.

Also, unlike the previous synchronous generator which has to be "synchronised" with the electrical grid before it can generate power, the induction generator can be connected directly to the utility grid and driven by the turbines rotor blades at variable wind speeds

For economy and reliability many wind power turbines use induction motors as generator which are driven through a mechanical gearbox to increase their speed of rotation, performance and efficiency. However, induction generators require reactive power usually provided by shunt capacitors in the individual wind turbines.

Induction machines are also known as **Asynchronous Machines**, that is they rotate below synchronous speed when used as a motor, and above synchronous speed when used as a generator. So when rotated faster than its normal operating or no-load speed, an induction generator produces AC electricity. Because an induction generator synchronises directly with the main utility grid – that is, produces electricity at the same frequency and voltage – no rectifiers or inverters are required.

However, the induction generator may provide the necessary power directly to the mains utility grid, but it also needs reactive power to its supply which is provided by the utility grid. Stand alone (off-grid) operation of the induction generator is also possible but the disadvantage here is that the generator requires additional capacitors connected to its windings for self-excitation.

Three-phase induction machines are very well suited for wind power and even hydroelectric generation. Induction machines, when functioning as generators, have a fixed stator and a rotational rotor the same as for the synchronous generator. However, excitation (creation of a magnetic field) of the rotor is performed differently and a typical design of the rotor is the

squirrel-cage structure, where conducting bars are embedded within the rotors body and connected together at their ends by shorting rings as shown.

1. Induction Generator Construction

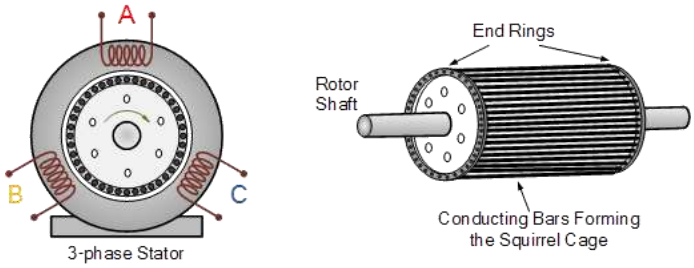

As already mentioned at the beginning one of the many advantages of the asynchronous machine is that it can be used as generator without any additional circuitry, such as an exciter or voltage controller, when it is connected to a three-phase mains supply. When an idle asynchronous generator is connected to an alternating current grid, voltage is induced into the rotor winding, similar to a transformer with the frequency of this induced voltage being equal to the frequency of the applied voltage.

Power Electronics interfaces of wind generators to the grid

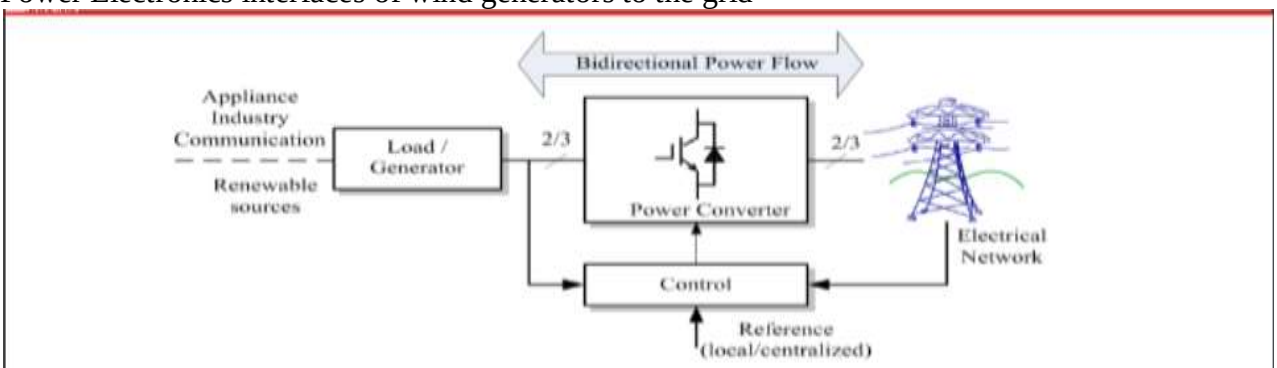

The interface of Wind power converter between generator and power grid should satisfy the requirements on both the sides. It has to store the active power and boost up the voltage from generator side to grid side.

- Generator side: * It should control stator current and adjust the rotating speed.
  * Extract maximum power from turbine.
- Power grid side: * It should have the ability to control the inductive/capacitive reactive power and perform fast active power response.
  *Frequency and voltage should be fixed for normal operation
  * Harmonic distortion should be maintained low.

Wind energy conversion

Wind energy conversion systems convert wind energy into electrical energy, which is then fed into electrical grid.

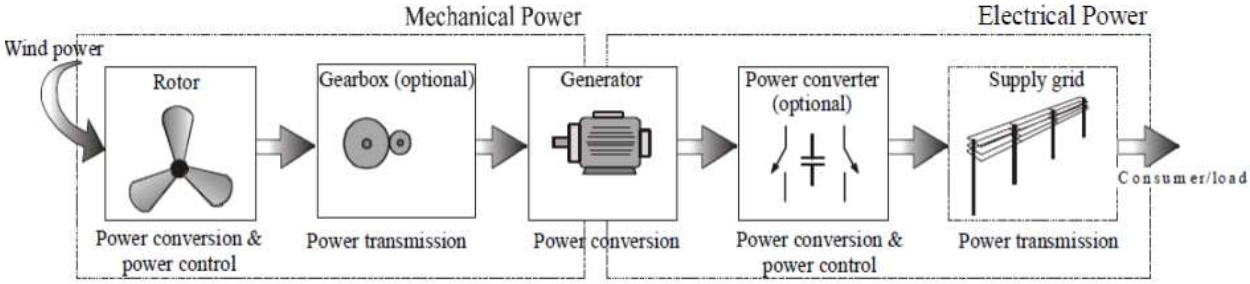

Fig. 4. Converting wind power to electrical power in a wind turbine

- The turbine rotor, gear box and generator are the main three components for energy conversion.
- Rotor converts wind energy to mechanical energy.
- Gear box is used to adapt to the rotor speed to generator speed.
- Generator with the variable speed wind turbine along with electronic inverter absorbs mechanical power and convert to electrical energy.
- The power converter can not only transfer the power from a wind generator, but also improve the stability and safety of the system.